VICON

AI ANALYTICS INSIDE

V-CELL-HD-C

Roughneck AI High-Security Corner Camera



NDAA GSA ONVIF S/G/T/M TAA

Overview

The Roughneck® AI V-CELL High-Security camera includes an anti-ligature, no grip, stainless steel housing with an internal camera that provides crystal-clear 5 MP images in the harshest of environments. The IK10 impact-resistant design, and secure tamper-resistant mount, guarantee the camera remains protected and video will always be there when you need it.

Upgrade your existing V-CELL camera to 5 MP!

For customers who already have a V-CELL camera installed, Vicon offers a camera-module-only upgrade that can be easily retrofitted into an existing V-CELL housing. Because the camera and all electronics are mounted on the removable front plate, there's no need to remove the entire housing to install the new camera. This can be done using conventional tools with minimal downtime.

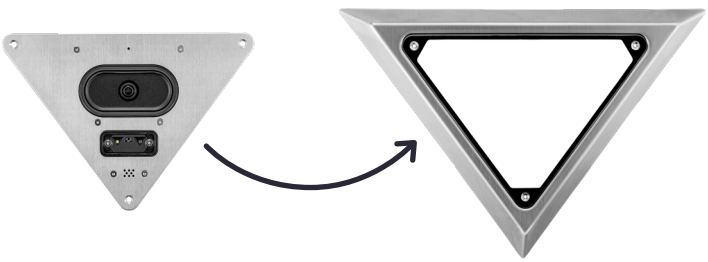

Product at a Glance

- 5 MP delivers the industry's highest resolution for this class of cameras
- 2.4 mm lens provides a nice wide-angle view of the entire area
- Invisible IR eliminates the visible glow so resident will not be distracted or alerted that camera is on
- Starlight low-light technology provides clear color images in extreme low-light conditions
- Perform more meaningful post-event forensic searches with object classification analytics
- IK10 is the maximum rating for protection against vandalism and physical damage
- Stainless steel water-resistant (IP66) design is corrosion-resistant and easy to clean

Specifications

Model	V-CELL-HD-C
Camera	
Image Sensor:	1/2.8 inch CMOS
Max Resolution:	2592 x 1944 (5 MP)
Image Settings:	Digital image effects: flip/mirror/both/off. Configurable brightness, contrast, saturation, hue, sharpness. True WDR. Defog. White balance. Automatic Gain Control. Shutter speed. Day/night mode. Gamma correction. EV (Exposure Value). BLC (Backlight Compensation). HLC (High Light Compensation). Dynamic Noise Reduction (3D/2D). Motion detection (8). Privacy zones (8). Exposure controls: auto, shutter priority, manual, flickerless. Event notification.
Video Analytics:	Motion detection. Tamper Detection. Museum Search.
AI-Based Object Classification Analytics:	Vehicles, people, animals
Shutter Speed:	Auto (1/2 ~ 1/10,000); manual
Day/Night Performance:	True day/night (IR cut filter). Modes: Auto, color, B&W; D/N switch sensitivity; D/N switch time
Wide Dynamic Range:	True WDR (120 dB)
Minimum Illumination:	Color: 0.003 lux; BW: 0.001 lux (IR Off); 0 lux (IR On)
IR Distance:	Built-in IR LED; 98 ft (30 m) effective up to 19.7 x 19.7 ft (6x6 m) room/cell; programmable intensity; Smart/Adaptive IR On/Off; 940 nm; IR mode: auto, on, off.
Signal-to-Noise Ratio (SNR):	>50 dB
Lenses	
Focal Length:	2.4 mm
Max. Aperture:	f/2.1
Iris:	Fixed
Zoom/Focus Adjust:	Fixed
Field-of-View:	Horizontal: 121° Vertical: 93°
Network Video Transmission	
Network:	IEEE 802.3; 10/100 Base-T/TX, auto-sensing; RJ-45
Image Compression:	H.265 (HEVC)/H.264 and M-JPEG; Smart Codec
Resolution:	2592x1944, 2688x1520, 2048x1536, 1920x1080 (1080P), 1280x960/720, 800x600, 640x480, 640x360, 320x240
Protocol:	IPv4, IPv6, TCP/IP, HTTP, HTTPS, UPnP, RTSP/RTP/RTCP, IGMP/Multicast, SMTP, DHCP, NTP, DNS, DDNS, CoS, QoS, SNMP, 802.1X, UDP, ICMP, ARP, TLS, ONVIF S/G/T/M
Frame Rate:	Max. 30 fps (5 MP)
Streams:	Triple streaming. Single: 5 MP @ 30 fps; Dual: 5 MP @ 30 fps + 1600x1200 @ 30 fps; Triple: 5 MP @ 30 fps + 1600x1200 @ 30 fps + 640x480 @ 30 fps
Alarm:	1 alarm in/1 relay out (30V, 1A)
Audio:	1 audio input/1 audio output (line in/out); built-in microphone (waterproof IP67) and speakers (sufficient for a cell/elevator): G.711a-law/G.711mu-law
Users:	10 users
Web Browser:	Mozilla® Firefox®, Google Chrome®, Microsoft® Edge
Security:	User account and password protection, HTTPS, IP Filter, Digest authentication, TLS1.2 only, AES128/256, SSH/ Telnet closed
Local Recording:	Micro-SD slot provided; customer supplied card; supports up to 1 TB
Mechanical	
Construction:	Anti-ligature enclosure: brushed stainless steel; mounting frame/assembly 14 gauge. Windows: polycarbonate; IR, 5 mm thick; camera, 6 mm thick
Mounting:	Designed to be mounted into a 90° corner. Front cover secured with security screws.
Dimensions:	12.4 x 14.7 x 2.9 in. (315 x 372 x 73 mm)
Weight:	3.3 lb (1.5 kg)

Specifications

Electrical	
Input Power:	24 VAC, 12 VDC, PoE IEEE 802.3af Class 3
Power Consumption):	IR On: 12.95 W max. IR Off: 7.85 W.
Connectors and Indicators:	Ethernet/PoE: RJ-45; Power: terminal block; Alarm In/Out: screw terminal; Audio In/Out: screw terminal; Reset button; Factory default button; Local recording: Micro SD card slot (customer-supplied card; supports up to 1 TB).
Environmental	
Operating Conditions:	Temp: -4° to 140° F (-20° to 60° C) Humidity: up to 90%, relative, non-condensing
Approvals:	UL/CUL (with rear bracket); CE/FCC Class B; IP66, IK10; ONVIF Profile: S/T/G/M; RoHS
Country of Origin:	Taiwan
Warranty:	5 years

Ordering Information

Model	Description
V-CELL-HD-C	5 MP HD high-security corner camera with 2.4 mm fixed lens
V-CELL-HD-CMOD	Camera module to upgrade any previous V-CELL series camera

Installation Diagram

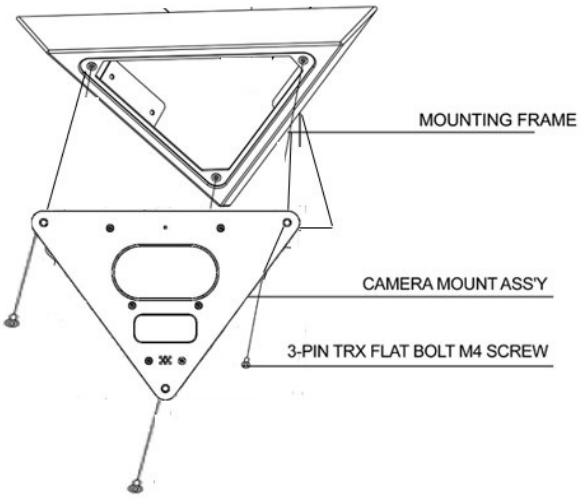

Data Sheet Number: V330-00-08
Vicon Data Sheet Number: 8009-7330-00-08

Specifications subject to change without notice.
Vicon, Roughneck and their logos are registered trademarks of Vicon Industries Inc.
Copyright © 2026 Vicon Industries Inc. All rights reserved.

Edge is a registered trademark of Microsoft Corporation.
Chrome is a registered trademark of Google LLC.
Firefox is a registerd trademark of Mozilla Corp.