VICON

AI ANALYTICS INSIDE

V2005CNR-W24IR

Roughneck AI Corner Mount Camera



NDAA GSA ONVIF S/G/T/M TAA

Overview

The Roughneck® AI Corner Mount Camera provides wall-to-wall and floor-to-ceiling coverage of small to medium areas, like elevators, waiting rooms, lobbies, and observation rooms. The 5 MP camera incorporates a 2.4 mm lens, which renders a wide angle view of the entire area. The anti-ligature vandal and impact-resistant aluminum housing is ideal for environments where there is a risk of tampering or destruction.

AI ANALYTICS INSIDE

Perform more meaningful post-event forensic searches with object classification analytics

The camera's object classification analytics allow it to distinguish people and vehicles from other objects in a scene. Object-only recording, and the ability to filter out "environmental noise" that can trigger a motion detection alarm (e.g., shadows, swaying trees and bushes, etc.), significantly increases operational efficiencies. The result?

- Filter out non-relevant video for faster incident resolution
- Reduce storage requirements (by limiting recording to just object-based motion)
- Diminish nuisance alarms
- Respond to genuine threats quicker, and with fewer resources

Product at a Glance

- 5 MP delivers the industry's highest resolution for this class of cameras
- 2.4 mm lens provides a nice wide-angle view of the entire area
- Record audio evidence via a built-in microphone (that can be disabled if preferred)
- Starlight low-light technology provides clear color images in extreme low-light conditions
- IK10 is the maximum rating for protection against vandalism and physical damage

Specifications

Model	V2005CNR-W24IR
Camera	
Image Sensor:	1/2.8 inch CMOS
Max Resolution:	2592 x 1944 (5 MP)
Image Settings:	Digital image effects: flip/mirror/both/off. Configurable brightness, contrast, saturation, hue, sharpness. True WDR. Defog. White balance. Automatic Gain Control. Shutter speed. Day/night mode. Gamma correction. EV (Exposure Value). BLC (Backlight Compensation). HLC (High Light Compensation). Dynamic Noise Reduction (3D/2D). Motion detection (8). Privacy zones (8). Exposure controls: auto, shutter priority, manual, flickerless. Event notification.
Video Analytics:	Motion detection. Tamper Detection. Museum Search.
AI-Based Object Classification Analytics:	Vehicles, people, animals
Shutter Speed:	Auto (1/2 ~ 1/10,000); manual
Day/Night Performance:	True day/night (IR cut filter). Modes: Auto, color, B&W; D/N switch sensitivity; D/N switch time
Wide Dynamic Range:	True WDR (120 dB)
Minimum Illumination:	Color: 0.003 lux; BW: 0.001 lux, IR Off; 0 lux (IR On)
IR Distance: Signal-to-Noise Ratio (SNR):	Built-in IR LED; 98 ft (30 m) effective up to 19.7 x 19.7 ft (6x6 m) room/cell; programmable intensity; Smart/Adaptive IR On/Off; 940 nm; IR mode: auto, on, off. >50 dB
Lenses	
Focal Length:	2.4 mm
Max. Aperture:	f/2.1
Iris:	Fixed
Zoom/Focus Adjust:	Fixed
Field-of-View:	Horizontal: 121° Vertical: 93°
Network Video Transmission	
Network:	IEEE 802.3; 10/100 Base-T/TX, auto-sensing; RJ-45
Image Compression:	H.265 (HEVC)/H.264 and M-JPEG; Smart Codec
Resolution:	2592x1944, 2688x1520, 2048x1536, 1920x1080 (1080P), 1280x960/720, 800x600, 640x480, 640x360, 320x240
Protocol:	IPv4, IPv6, TCP/IP, HTTP, HTTPS, UPnP, RTSP/RTP/RTCP, IGMP/Multicast, SMTP, DHCP, NTP, DNS, DDNS, CoS, QoS, SNMP, 802.1X, UDP, ICMP, ARP, TLS, ONVIF S/G/T/M
Frame Rate:	Max. 30 fps (5 MP)
Streams:	Triple streaming. Single: 5 MP @ 30 fps; Dual: 5 MP @ 30 fps + 1600x1200 @ 30 fps; Triple: 5 MP @ 30 fps + 1600x1200 @ 30 fps + 640x480 @ 30 fps
Alarm:	1 alarm in/1 alarm out; 1 relay out (30V, 1A)
Audio:	1 audio input/1 audio output (line in/out); built-in microphone (waterproof IP67) and speakers (sufficient for a cell/elevator): G.711a-law/G.711mu-law
Users:	10 users
Web Browser:	Mozilla® Firefox®, Google Chrome®, Microsoft® Edge
Security:	User account and password protection, HTTPS, IP Filter, Digest authentication, TLS1.2 only, AES128/256, SSH/ Telnet closed
Local Recording:	Micro-SD slot provided; customer supplied card; supports up to 1 TB
Mechanical	
Construction:	Anti-ligature enclosure: aluminum Windows: polycarbonate; IR, 5 mm thick; camera, 6 mm thick
Mounting:	Designed to be mounted into a 90° corner. Front cover secured with security screws.
Dimensions:	8.2 x 7.9 x 2.4 in. (208 x 200 x 60 mm)
Weight:	4.4 lb (2 kg)

Specifications

Electrical	
Input Power:	24 VAC, 12 VDC, PoE IEEE 802.3af Class 3
Power Consumption:	IR On: 12.9 W max. IR Off: 10.6 W.
Connectors and Indicators:	Ethernet/PoE: RJ-45; Power: terminal block; Alarm In/Out: screw terminal; Reset button; Factory default button; Local recording: Micro SD card slot (customer-supplied card; supports up to 1 TB).
Environmental	
Operating Conditions:	Temp: -4° to 140° F (-20° to 60° C) Humidity: up to 90%, relative, non-condensing
Approvals:	UL, CUL, CE/FCC Class B, IP66, IK10; ONVIF Profile: S/T/G/M; RoHS
Country of Origin:	Taiwan
Warranty:	5 years

Ordering Information

Model	Description
V2005CNR-W24IR	5 MP HD corner-mount camera with 2.4 mm fixed lens

Dimensional Drawing

[in. (mm)]

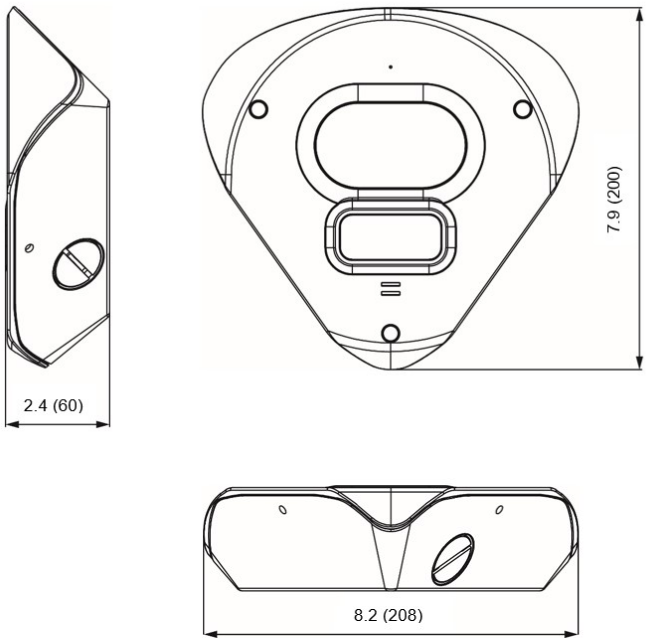

Data Sheet Number: V331-00-07
Vicon Data Sheet Number: 8009-7331-00-07

Specifications subject to change without notice.
Vicon, Roughneck and their logos are registered trademarks of Vicon Industries Inc.
Copyright © 2026 Vicon Industries Inc. All rights reserved.

Edge is a registered trademark of Microsoft Corporation.
Chrome is a registered trademark of Google LLC.
Firefox is a registerd trademark of Mozilla Corp.