VICON

V2008PTZ-IR

Roughneck AI PTZ Dome



NDAA GSA ONVIF S/G/T/M TAA

Overview

Vicon's Roughneck® 8 MP (4K) PTZ features advanced imaging in a durable package. The camera delivers exceptional views with a powerful 35x optical/8x digital zoom, along with motorized focus and a P-iris lens. The camera is equipped with the highest impact rating available, IK10. And its IP66 rating offers complete protection against dust and water intrusion, including high-pressure water jets.

You can initiate the dome's speed-dry feature, which instructs the dome to shake rapidly, removing any water droplets, bugs, pollen, etc., that might be obstructing the lens.

The camera's image stabilization reduces vibration and blurring, especially when the camera is zoomed all the way in, or it is installed up high or in a windy area.



PTZ shown with optional Wall Mount

Product at a Glance

- 8 MP (4K) resolution
- 35X optical zoom; 8X digital zoom
- Integrated IR provides uniform illumination in total darkness for high-quality video from 1312 feet (400 m) away
- Starlight low-light technology provides clear color images in extreme low-light conditions
- Speed-dry removes water droplets from the exterior of the dome
- Auto-tracking of people
- Two-way audio; one alarm input/alarm output

Click or scan to see PTZ auto-tracking in action.

Specifications

Model	V2008PTZ-IR
Camera	
Image Sensor:	1/1.8" Sony® Starvis™ Gen2
Max Resolution:	8 MP (4K)
Image Settings:	Digital image effects: defog, flip and mirror. Configurable brightness, contrast, saturation, hue, sharpness. White balance. Backlight Compensation (BLC). Gain control. Electronic shutter speed. OSD settings. Day/night mode. Dynamic Noise Reduction (3 DNR). Motion detection (5 programmable zones). Privacy masking (32 3D masks). Dynamic ROI. Event notification. Optical image stabilization (OIS).
Intelligent Video Analytics:	Motion, Tampering, Intrusion, Line Cross, Tailgating, Loitering, Crowding, Auto-Tracking (people). Museum Search.
Electronic Shutter Speed:	1/7 ~ 1/16,000 sec
Day/Night Performance:	True day/night (IR cut filter)
Wide Dynamic Range	True WDR (130 dB)
Minimum Illumination (@ 30 IRE):	Color: 0.04 lux; B/W: 0.01 lux (IR OFF; 0 lux IR ON)
IR Distance:	Adaptive IR: 1312 ft (400 m)
Signal-to-Noise Ratio (SNR):	>50 dB
Lens	
Focal Length:	6.5 - 230 mm (35X optical zoom); digital 8X
Max. Aperture:	f/1.5 - f/5.3
Iris:	P-iris
Zoom/Focus Adjust:	Motorized focus and zoom; autofocus
Field-of-View:	2.0° - 60.4° (H); 1.2° - 35.9° (V)
Network Video Transmission	
Network:	10/100/1000 Base-T, RJ-45
Image Compression:	H.265/H.264/M-JPEG
Resolution:	3840×2160, 2560×1440, 1920×1080, 1280×960, 1280×720, 720×408, 640×360
Protocol:	DHCP, DNS, DDNS, FTP, HTTP, HTTPS, ICMP, IPv4/6, NTP, RTSP/RTCP/RTP/RTMP, QoS, SMTP, SNMP v2c/3, TCP/IP, UDP, UPnP, 802.1X, LDAP, SSL 1.1.1G, TLS 1.2, Zeroconfig, Bonjour, Firewall; ONVIF S/G/T/M
Frame Rate:	30/25 fps @ 4K max resolution
Streams:	Triple streaming
Users:	Live viewing for up to 10 clients
Web Browser:	Safari®, Firefox®, Chrome™, Microsoft Edge™
Security:	IP address filtering, HTTPS encrypted data transmission, IEEE 802.1X, Digest Authentication
Local Recording:	Micro-SD slot provided; customer supplied SDHC/SDXC card; 1 TB max capacity
Electrical	
Input Power:	PoE++ (IEEE 802.3bt, Class 8); 24 VAC (+20%/-10%)
Current (IR on):	24 VAC: 3.25 A
Power Consumption:	Total Power: 71 W max (including IR On; Heater/Blower On)
Controls and Connectors	
Indicators and Connectors:	24 VAC Power: terminal block. Network/PoE: RJ-45. Audio In/Out and Alarm In/Out: terminal block. SDHC/SDXC Card Slot. Reset button. Indicator: network status LED.
General	
Operating Conditions:	Temperature: -40° to 149° F (-40° to 65° C); -40° to 158° F (-40° to 70° C) IR Off for 4 hours a day. Humidity: 10% to 90%, relative, non-condensing
Approvals & Ratings:	UL; FCC Class A; CE; IP66; IK10 (housing); ONVIF S/G/T; RoHS
Country of Origin:	Taiwan
Warranty:	5 years

Specifications

Model	V2008PTZ-IR
Mechanical	
Construction:	Housing: Aluminum; Sunshield: Polycarbonate; Lens Cover: Coated Glass
Pan Range:	360° continuous pan
Pan Speed:	0.05° - 720°/second
Tilt Range:	-20° - 90°
Tilt Speed:	0.05° - 540°/second
Presets:	256; 32 presets per tour. Accuracy: 0.01°.
Tours/Patterns:	8/8
Auto-Tracking:	People
Alarm:	1 alarm input/1 alarm output
Audio Capability:	Two-way. 1 audio input/1 audio output (line in/out); G.711 (a-law, u-law); 8KHz/16 bits
Mounting:	1.5" NPT pipe interface
Dimensions (Diam x H):	7.5 in. (190 mm) x 14.2 in. (361.9 mm)
Weight:	11 lb (5 kg)

Ordering Information

Model	Description
V2008PTZ-IR	**8 MP PTZ** 6.5-230 mm P-Iris lens with 35x optical zoom; 1,312 ft (400 m) IR; speed-dry; auto-tracking of people; 71 W max; requires 90 W power injector (VPOE-INJ-90BT-A).
Mounts and Accessories	
V1001-JB	**Junction Box** Assists with wiring management of the PTZ's connectors. Requires wall mount (V1001-WM), which affixes to the J-Box. J-Box can mount directly to a wall, or to the corner mount (V1001-CM) or pole mount (V1001-PL).
V1001-WM	**Wall Mount (medium)** For mounting the PTZ directly to a wall, J-Box, corner mount, or pole mount.
V1001-CM	**Corner Mount** For mounting the PTZ to a corner. Requires wall mount (V1001-WM). The corner mount also accommodates the J-Box (V1001-JB).
V1001-PL	**Pole Mount** For mounting the PTZ to a pole. Requires wall mount (V1001-WM). The pole mount also accommodates the J-Box (V1001-JB).
V1001-PM	**Pendant Mount** For suspending the PTZ from the ceiling.
SVFT-UPM-2	**Parapet Mount** For mounting the PTZ over the raised barrier at the edge of a roof.
SVFT-UCM-1	**Hard Ceiling Mount** For affixing the PTZ directly to a hard ceiling.
SVFT-UWM-1	**Wall Mount (large)** For mounting the PTZ directly to a wall, corner mount, or pole mount.
V-24CMB-4	**Corner Mount** For mounting the PTZ to a corner. Requires wall mount (SVFT-UWM-1).
V-20B-A-4	**Pole Mount** For mounting the PTZ to a pole. Requires wall mount (SVFT-UWM-1).
VPOE-INJ-90BT-A	**Single-Port PoE** 90 W. Required for PTZ power management.

Dimensional Drawing

[in. (mm)]

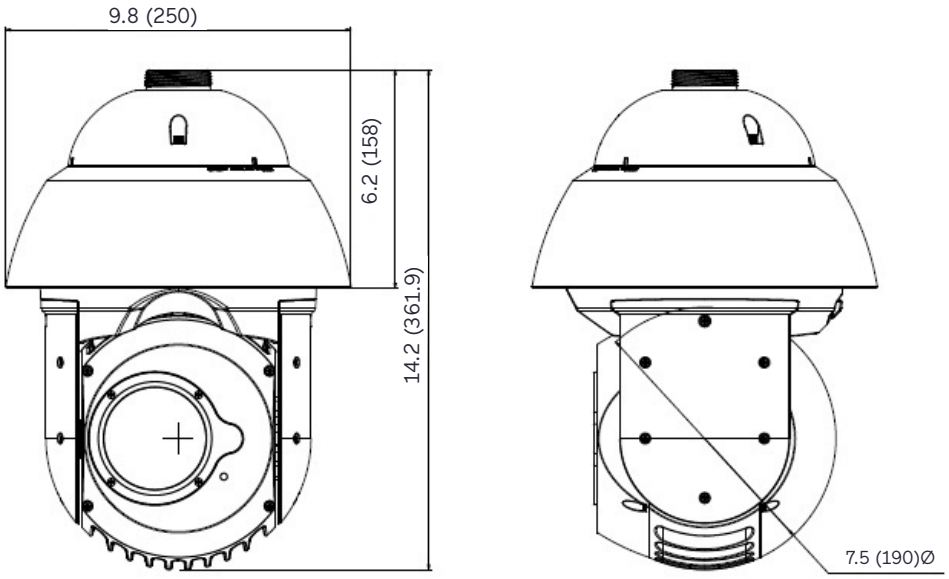



V1001-WM



V1001-JB

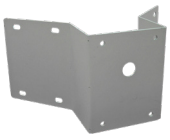

V1001-CM



V1001-PL



V1001-PM



SVFT-UCM-1



SVFT-UPM-2



SVFT-UWM-1



V-24CMB-4



V-20B-A-4



VPOE-INJ-90BT-A

Data Sheet Number: V341
Vicon Part Number: 8009-7341-00-01

Specifications subject to change without notice.
Vicon and their logos are registered trademarks of Vicon Industries Inc.
Copyright © 2026 Vicon Industries Inc. All rights reserved.

Microsoft Edge is a trademark of Microsoft Corporation.
Chrome is a trademark of Google LLC.
Firefox is a registerd trademark of Mozilla Corp.
Safari is a registered trademark of Apple Inc.
Sony and Starvis are registered trademarks or trademarks of Sony Corporation.