VICON

AI ANALYTICS INSIDE

V2360W-12-1

Roughneck AI Panoramic Dome



NDAA GSA Onvif S/G/T/M TAA

Overview

Vicon's Roughneck® AI Panoramic Dome provides 360° coverage of an entire area — in 12 MP resolution — for unlimited viewing angles from just one camera. You'll get widespread situational awareness and no blind spots, using a single dome that does the job of three or more cameras. Plus, the camera's flexible display modes allow you to set up your preferred viewing angles to target specific areas of interest.

With the camera in 360° mode, you can use digital PTZ to see high-quality video from multiple angles at the same time. The dome's full field-of-view is always recorded, so you can easily go back and look at different areas at any time.

AI ANALYTICS INSIDE

Perform more meaningful post-event forensic searches with object classification analytics

The camera's object classification analytics allow it to distinguish people and vehicles from other objects in a scene. Object-only recording, and the ability to filter out "environmental noise" that can trigger a motion detection alarm (e.g., shadows, swaying trees and bushes, etc.), significantly increases operational efficiencies. The result?

- Filter out non-relevant video for faster incident resolution
- Reduce storage requirements (by limiting recording to just object-based motion)
- Diminish nuisance alarms
- Respond to genuine threats quicker, and with fewer resources

Product at a Glance

- 12 MP image sensor provides clear, crisp 360-degree views across large settings
- Client de-warping is available for customers who prefer to do this via Vicon's Valerus VMS
- True WDR (120 dB) captures both the dark and bright areas of an environment without under/overexposure of the resulting image
- Smart IR lets you see high-quality, low-noise video from 49 feet (15 meters) away in the dark, and the object is not overexposed when it gets too close to the camera
- Built-in microphone eliminates the need to purchase and install a separate device for applications that require audio in

Specifications

Model	V2360W-12-1
Camera	
Image Sensor:	12 MP; 1/2.3-in. CMOS
Image Settings:	Digital image effects: flip, mirror. Configurable brightness, contrast, saturation, hue, sharpness. White balance. Back-light Compression (BLC). HLC. Gain control. Gamma correction. Electronic shutter speed. Day/night mode. Dynamic Noise Reduction (3 DNR). Motion detection (4 programmable zones). Privacy masking (8 masks). Dynamic ROI. Event notification.
Intelligent Video Analytics:	Motion, Tampering/Defocus, Intrusion, Loitering, Line Cross, Tailgating, Object Left/Removed, Crowding. Museum Search.
AI-Based Object Classification Analytics:	Vehicles, people, animals
Electronic Shutter Speed:	Auto (1/2 ~ 1/10,000 sec), manual
Day/Night Performance:	True day/night (IR cut filter)
Wide Dynamic Range	True WDR; 120 dB
Minimum Illumination:	Color: 0.007 lux @30 IRE; BW: 0.1 lux, IR Off @30 IRE; 0 lux (IR On)
IR Distance:	Smart IR: 49 ft (15 m); 1 IR LED
Signal-to-Noie Ratio (SNR):	>50 dB
Lenses	
Focal Length:	Fixed f/1.6 mm focal length; f/2.0
Field of View:	195° (at full resolution); 360° (surround view)
Network Video Transmission	
Network:	10/100Base-T/TX, RJ-45
Image Compression:	H.265/H.624 and M-JPEG
Resolution:	2976×2976, 2592×2592, 2048×2048, 1952×1952, 1536×1536, 1280×1280, 960×960, 640×640
Protocol:	ARP, DHCP, DNS, FTP, HTTP, HTTPS, HLS, ICMP, IGMP, IPv4/6, LDAP, NTP, RTSP/RTCP/RTP, RTMP, QoS, SMTP, SNMP v1/2c/3, TCP, TLS/TTLS, UDP, UPnP, 802.1X, UPnP, Bonjour, DDNS, PPPoE; ONVIF S/G/T/M
Frame Rate:	Max 30 fps (25 fps, PAL)
Streams:	Triple streaming. 2976×2976 @30 fps; 960×960 @30 fps; 640×640@30 fps
Audio:	1 audio input/1 audio output; G.711 (a-law, μ-law); built-in microphone; audio level alarm
Alarm:	1 alarm input/1 alarm output
Users:	Live: 10 users
Web Browser:	Internet Explorer®; Safari®, Firefox®, Google Chrome®, Microsoft® Edge
Security:	IP address filtering, HTTPS encrypted data transmission, SSL, IEEE 802.1X, Digest Authentication, Advanced Security
Local Recording:	Micro-SD slot provided; customer supplied SDHC/SDXC card

Specifications

Model	V2360W-12-1
Electrical	
Input Power:	PoE+ (IEEE 802.3at, Class 4); 24 VAC (+20%/-10%)
Current (IR on):	1.1 A @24 VAC; 0.52 A @PoE
Power Consumption:	IR/Heaters On: 13.9 W. IR/Heaters Off: 10.7 W.
Mechanical	
Construction:	Housing: White aluminum base. Bubble: PC
Mounting:	Surface mounting (wall or ceiling), wall arm, pendant, J-Box, pole, corner, 4×4 electrical plate, backbox
Dimensions:	5 in. (150 mm) (Diam) x 2.2 in. (57 mm) (H); refer to dimensional diagram
Weight:	2 lb (0.9 kg)
Controls and Connectors	
Connectors:	Optional backbox available for cabling. Power: 24 VAC: terminal block. Network/PoE: RJ-45 CAT 5. Alarm In/Out: screw terminal. Audio In/Out: screw terminal; built-in mic. Reset button. Default button. Micro SD card slot for SDHC/SDXC card (128 G max; customer supplied).
Environmental	
Operating Conditions:	Temperature: -40° to 122° F (-40° to 50° C) Humidity: up to 90%, relative, non-condensing
Dual Heater System:	For low temperature operation: heater turns on at -40° F (-40° C) and off at 59° F (15° C). For defog operation: heater turns on at -40° F (-40° C) and off at 140° F (60° C)
Approvals:	UL, FCC Class A, CE, IP67, IK10; ONVIF Profile: S/T/G/M; RoHS
Country of Origin:	Taiwan
Warranty:	5 years

Dimensional Drawing

[in. (mm)]

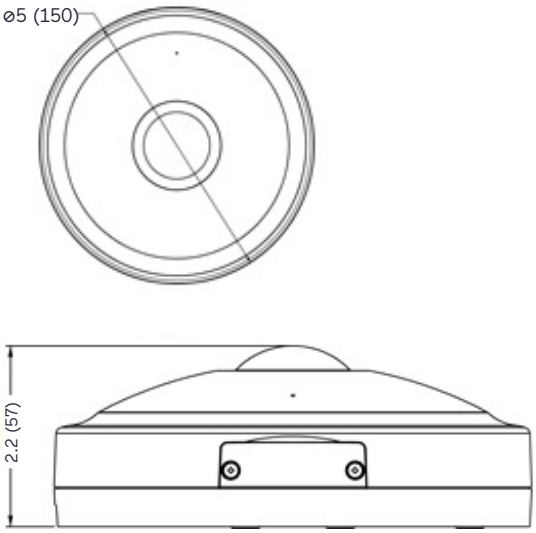

For Ease of Cabling Use Optional V2000B-BOX (sold separately)

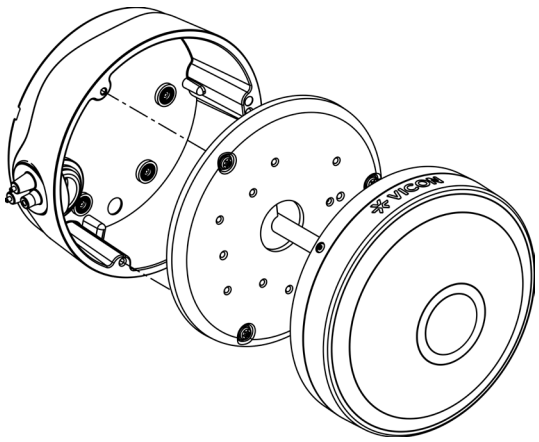

Ordering Information

Model Number	Description
V2360W-12-1	**12 MP Panoramic Camera** Fixed f/1.2 fisheye lens.
Mounts and Accessories	
V2000D-PM	**Pendant Cap** Provides pendant mounting configuration for use with SVFT-WM-1 and V1001-WM wall mounts.
V1001-WM	**Wall Mount (medium)** For mounting the dome directly to a wall, J-Box, corner mount, or pole mount.
SVFT-WM-1	**Wall Mount (small)** For mounting the dome directly to a wall, corner mount, or pole mount.
V1001-JB	**Junction Box** Assists with wiring management of the dome's connectors. Requires wall mount (V1001-WM), which affixes to the J-Box. J-Box can mount directly to a wall, or to the corner mount (V1001-CM) or pole mount (V1001-PL).
V1001-CM	**Corner Mount** For mounting the dome to a corner. Requires wall mount (V1001-WM). The corner mount also accommodates the J-Box (V1001-JB).
V1001-PL	**Pole Mount** For mounting the dome to a pole. Requires wall mount (V1001-WM). The pole mount also accommodates the J-Box (V1001-JB).
V1001-PM	**Pendant Mount** For suspending the panoramic camera from the ceiling.
SVFT-UPM-2	**Parapet Mount** For mounting the dome over the raised barrier at the edge of a roof.
SVFT-UCM-1	**Hard Ceiling Mount** For affixing the dome directly to a hard ceiling.
V2360W-PLATE	**Adapter Plate** Allows the panoramic camera to be mounted on a 4×4 electrical box.
V2000B-BOX	**Backbox** For ease of cabling for the panoramic camera.
V2360W-ICD	**In-Ceiling Mount** Allows panoramic camera to be mounted in a drop ceiling.
V2360W-ICH	**In-Ceiling Mount** Allows panoramic camera to be mounted in a hard ceiling.
V2XXX-WDG	**Wedge Mount** Allows the panoramic camera to be surface mounted on a tilt to maintain a full view.
V2XXX-WDG-PLATE	**Adapter Plate** Allows V2XXX-WDG to be mounted on a 4×4 electrical box.


V2000D-PM


V1001-WM


SVFT-WM-1


V1001-JB

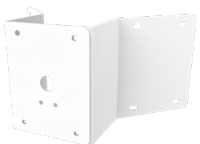
V1001-CM

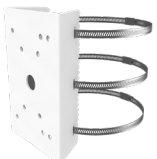
V1001-PL


V1001-PM


SVFT-UPM-2

SVFT-UCM-1


V2360W-PLATE


V2000B-BOX

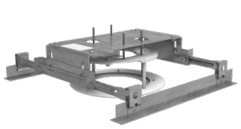
V2360W-ICD


V2360W-ICH


V2XXX-WDG


V2XXX-WDG-PLATE

Data Sheet Number: V318-61-07
Specifications subject to change without notice. Vicon, Roughneck and their logos are registered trademarks of Vicon Industries Inc.
Copyright © 2026 Vicon Industries Inc. All rights reserved.